BOM Table			
ITEM NO.	PART NUMBER	DESCRIPTION	QTY.
1	4989	PRESS ON CRIMP	2
2	N/A	FLEXINOL ® ACTUATOR WIRE	1

POST CRIMP ASSEMBLY*

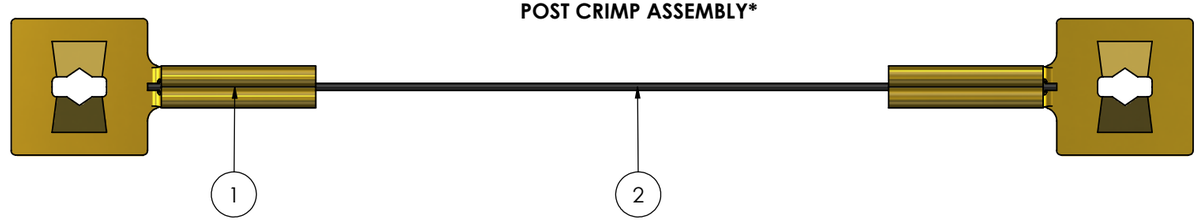

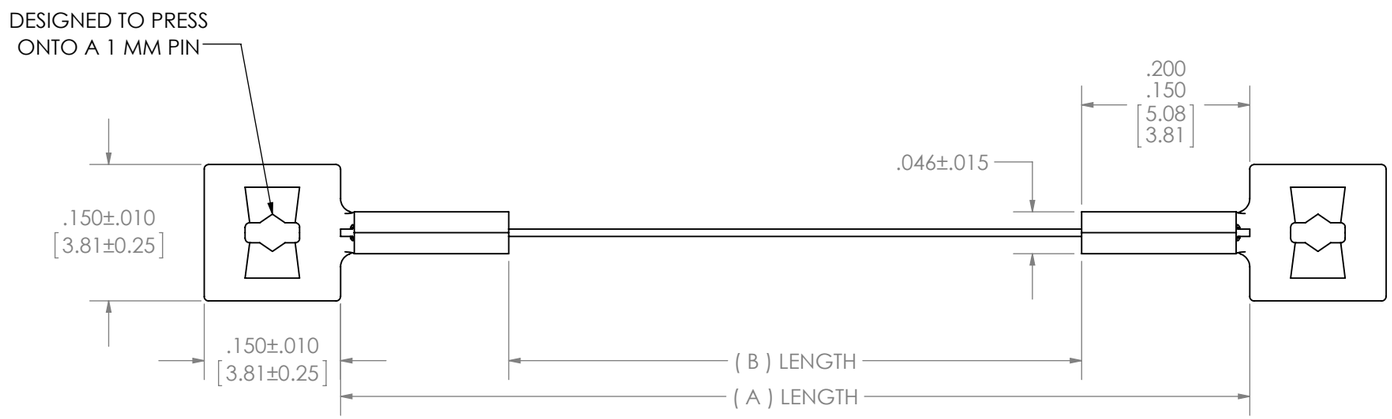

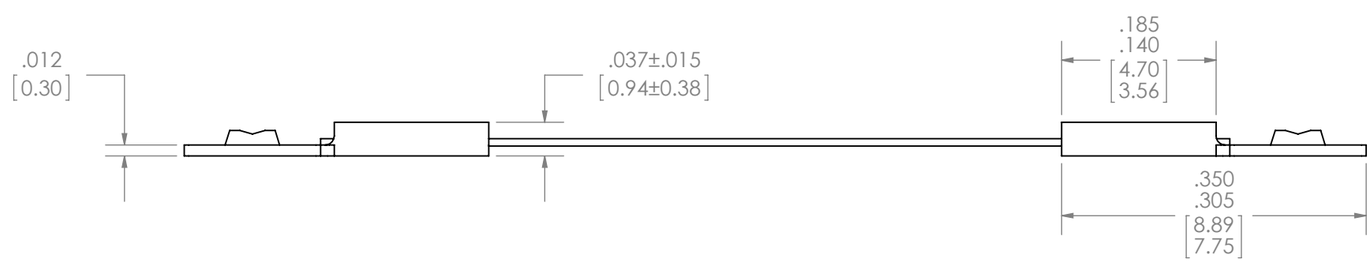

REFERENCE ONLY
*MAY CHANGE SLIGHTLY WITH DIFFERENT WIRE DIAMETERS DOES NOT INCLUDE MINIMAL FLASH/DEFORMATIONS THAT ARE CREATED DURING CRIMPING.

PROPRIETARY
THE INFORMATION CONTAINED IN THIS DRAWING IS THE SOLE PROPERTY OF DYNALLOY, INC. ANY REPRODUCTION IN PART OR AS A WHOLE WITHOUT THE WRITTEN PERMISSION OF DYNALLOY, INC IS PROHIBITED.

UNITS: INCHES [MM]
SCALE: 6:1
MATERIAL: BRASS

	NAME	INITIAL	DATE
DESIGNER	C. WASSON		
DRAFTER	G. IVANOV		
CHECKED			
APPROVED			

FLEXINOL®
DYNALLOY, Inc.

TITLE: PRESS ON CRIMP: CRIMPED ASSEMBLY
DWG. NO.: DI4955_4989RevB
PART NO.: 4989
DATE: 8/8/2016
SIZE: B
SHEET: 1 OF 1